Safety ez Fuse

New !! Patented

Lead (Pb) Free

RoHS

Part No. 1307 series Horizontal Spade Type

- Slow Blow (T), Surge Withstand
- Size: 20(L) x 10(W) x 12.5(H)mm
- Ampere Rating: 800mA~150A
- Voltage: 250V and Less
- Standard: IEC 60127-4(UMF)
- Material: * Insulating Body: Fiberglass Reinforced Plastic, UL94V0 Flame Resistant
  * Element: Silver Alloy
  * Terminals: Copper With Tin Plated, 0.8mm Thickness
  Option: Gold or Silver Plated Available Upon Request
- Spade Terminal For Easy Entry
- High Vibration Resistant
- Shock Safe Casing
- Low Internal Resistant
- Designed And Patented By GLORYTECH
- Application: TV, VCR, Monitor, Adapter, Communication Equipments, Protection and Safety For All Other Small Equipment
- Replace Conventional Cartridge Fuses

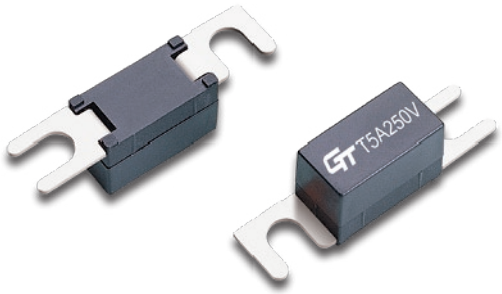

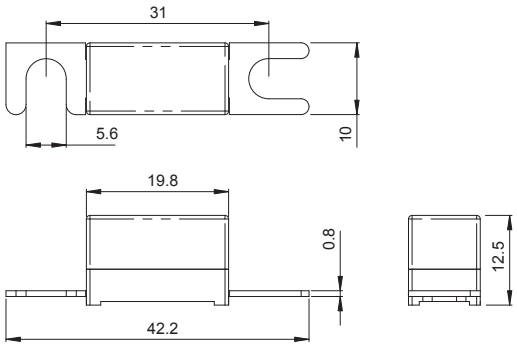

Scale: mm

Specifications

Opening Time / Pre-arcing Time:

In	1.0 In	1.25 In	2.0 In	10 In	
800mA-30A	Carry	Min.	Max.	Min.	Max.
		60 min.	120 s	10 ms	100 ms

Ordering Information:

Part Number	Ampere (A)	Voltage (V)	Voltage Drop Max. (mV)	Breaking Capacity (AC)	I²t Min. (A²s)	
13070800440	800 mA	250 V	130	500A 250V	11	Pending
13071100440	1 A	250 V	120	500A 250V	19.2	Pending
13071125440	1.25 A	250 V	110	500A 250V	27.2	Pending
13071160440	1.6 A	250 V	100	500A 250V	44	Pending
13071200440	2 A	250 V	90	500A 250V	92.5	Pending
13071250440	2.5 A	250 V	90	500A 250V	138	Pending
13071315440	3.15 A	250 V	80	500A 250V	206	Pending
13071400440	4 A	250 V	70	500A 250V	220	Pending
13071500440	5 A	250 V	60	500A 250V	314	Pending
13071630440	6.3 A	250 V	50	500A 250V	500	Pending
13071700440	7 A	250 V	50	500A 250V	600	Pending
13071800440	8 A	250 V	50	500A 250V	750	Pending
13072100440	10 A	250 V	50	500A 250V	1000	Pending
13072120440	12 A	250 V	50	500A 250V	1200	Pending
13072150440	15 A	250 V	50	500A 250V	1440	Pending
13072160440	16 A	250 V	50	500A 250V	1650	Pending
13072200440	20 A	250 V	50	500A 250V	2800	Pending
13072250440	25 A	250 V	50	500A 250V	3750	Pending
13072300440	30 A	250 V	50	500A 250V	5500	Pending
13072350440	35 A	80 V	50	1000A 80VDC	7500	Pending
13072400440	40 A	80 V	50	1000A 80VDC	9500	Pending
13072500440	50 A	80 V	50	1000A 80VDC	15000	Pending
13072600440	60 A	80 V	50	1000A 80VDC	20000	Pending
13072700440	70 A	80 V	50	1000A 80VDC	30000	Pending
13072800440	80 A	80 V	50	1000A 80VDC	40000	Pending
13073100440	100 A	80 V	50	1000A 80VDC	60000	Pending
13073120440	120 A	80 V	50	1000A 80VDC	85000	Pending
13073125440	125 A	80 V	50	1000A 80VDC	90000	Pending
13073150440	150 A	80 V	50	1000A 80VDC	146500	Pending